Teknik Çizimler - HB-105

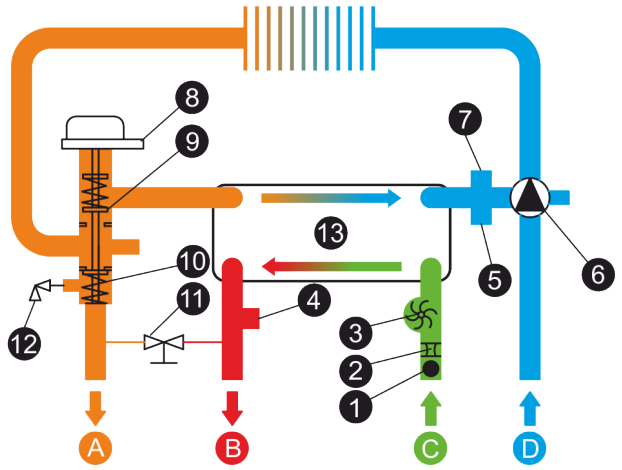

1. DHW Filter
2. Flow Regulator
3. Flow Sensor
4. NTC Sensor Connection
5. Pressure Switch/Sensor Conn.
6. Circulation Pump
7. Expansion Vessel Connection
8. 3 Way Valve Motor
9. Automatic Bypass
10. 3 Way Valve
11. Filling Tap
12. Safety Valve
13. Plate Heat Exchanger

A Heating Delivery CH
B Sanitary Water Outlet DW
C Sanitary Water Inlet DW
D Heating Return CH

/

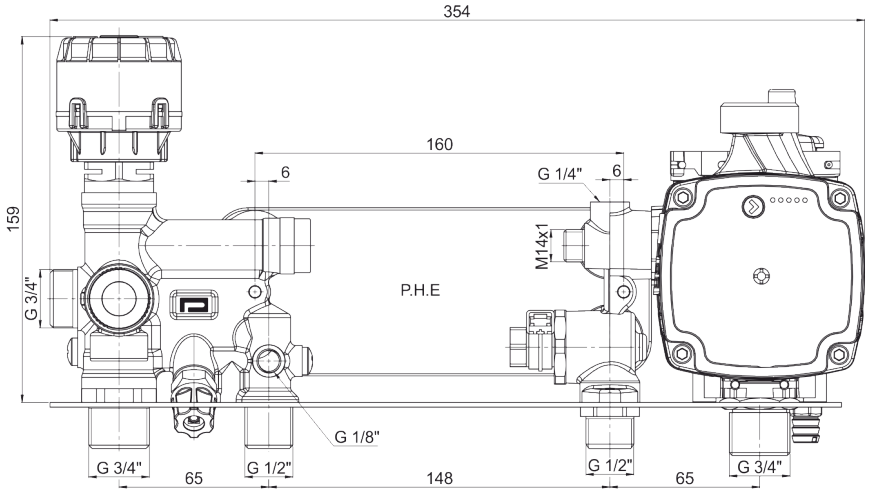

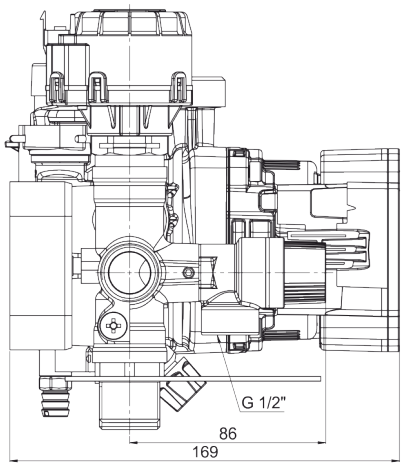

/