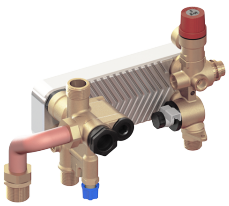

Gruppi idraulici - HB-112

Proprietà Costruttive

Flow Detection	· Turbine Type Flowmeter with Hall Effect Sensor
Pump Connection	· Side
By-Pass Type	· Through PHE
Material	· CuZn40Pb2 (CW617N)
Flow Regulator	· 6 to 22 (lt/min)
Pressure Relief Valve	· 3 bar ½”

Immagine di disegno tecnico - HB-112

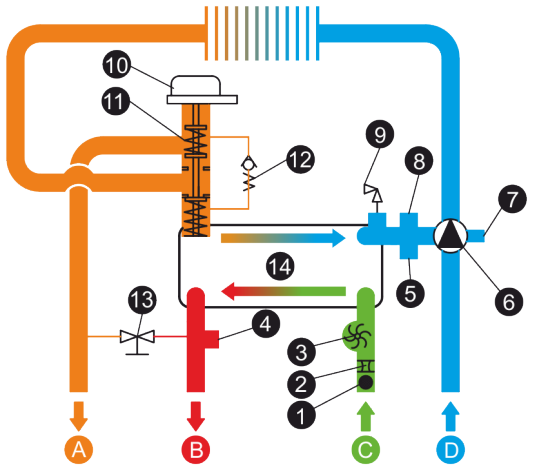

1. DHW Filter
2. Flow Regulator
3. Flow Sensor
4. NTC Sensor Connection
5. Pressure Gauge Connection
6. Circulation Pump
7. Expansion Vessel Connection
8. Pressure Switch Sensor Connection
9. Safety Valve
10. 3 Way Valve Motor
11. 3 Way Valve
12. Automatic Bypass
13. Filling Tap
14. Plate Heat Exchanger

A Heating Delivery CH
B Sanitary Water Outlet DW
C Sanitary Water Inlet DW
D Heating Return CH

/

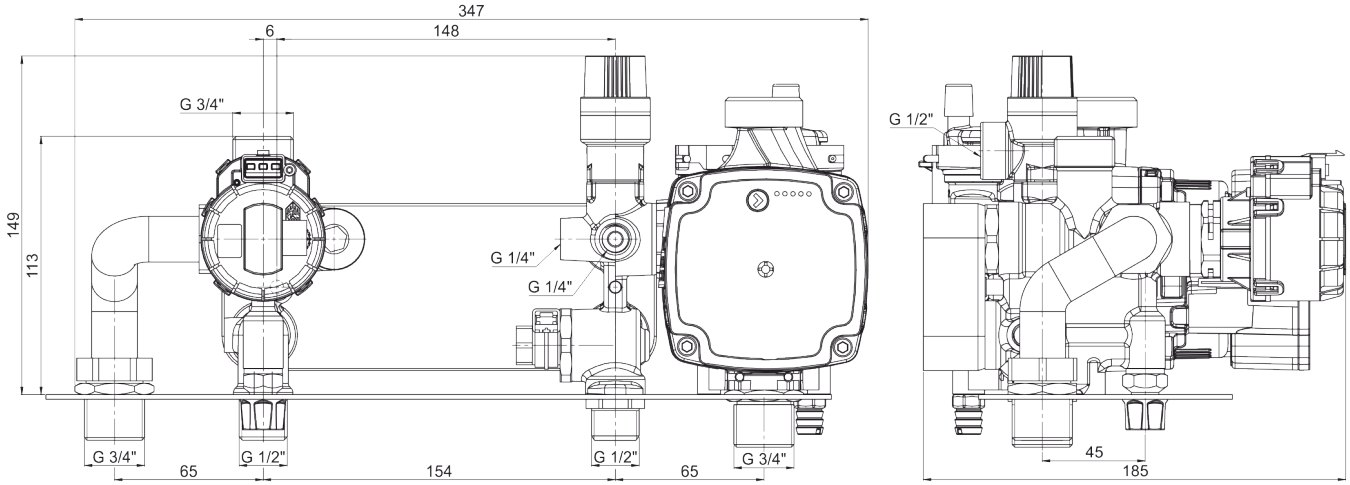

/