Technical Drawings - Automatic Air Vent

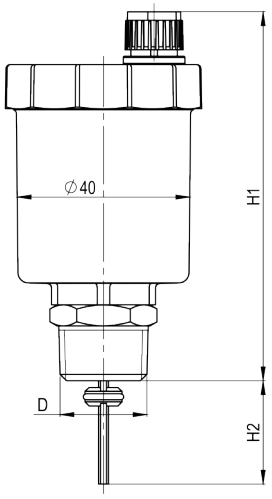

∅40			
KOD	**D**	**H1**	**H2**
136200	R 3/8"	86	24,5
136300	R 1/2"	86	24,5

136200 /

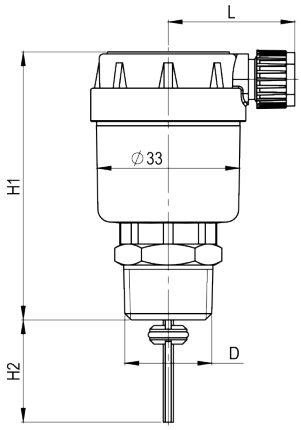

∅33				
KOD	**D**	**H1**	**H2**	**L**
135200	R 3/8"	63,5	24,5	28,5
135300	R 1/2"	63,5	24,5	28,5

135200 /